Failure Diagnosis

FAG's Guide to Troubleshooting Wheel Bearing Failures and Malfunctions

SCHAEFFLER
AUTOMOTIVE AFTERMARKET

Contents

State-of-the-art FAG Wheel Bearings are engineered for life. Thanks to the exceptional quality and manufacturing standards maintained at Schaeffler Group our products stand out for their reliability and driving safety. The service life of wheel bearing applications is exceptionally long – provided they operate under ideal conditions. However, this is rarely the case. There is wide array of effects that inpair the service life, including:

- Road conditions
- Frequent mounting and descending of curbs
- Installation or removal faults
- Weather conditions
- Incorrect part identification
- Product environment

To ensure professional handling of wheel bearings it is absolutely essential to examine the vehicle's overall condition and the wheel bearing environment, keep the workplace clean, and employ suitable garage equipment. Repairs of safety-critical parts should only be performed by highly trained and skilled technicians.

To meet these requirements, access to up-to-date technical information provided by vehicle manufacturers is an absolute must.

This information, including tightening torque specifications, is available to every customer of the Schaeffler Group at its www.RepXpert.com Internet portal.

Following the above guidelines ensures professional repair and prevents premature wheel bearing failure. A change in the vehicle's operating behavior is a typical sign of rolling bearing damage. Careful examination of defective wheel bearings reveals a wide range of damage features. To pinpoint the root cause it is often not sufficient to examine the bearing in isolation from the system. Only by scrutinizing adjacent parts, lubrication and sealing in addition to the operating and environmental conditions can any damage be assessed reliably.

Sound technical expertise, vehicle-specific knowledge and a systematic approach are the keys to professional rolling bearing damage assessment.

2 Damage Patterns

2.1 Corrosion

Moisture ingress is one of the primary causes of rolling bearing failure and inevitably corrodes the bearing. Corrosion can be service-induced or external, or may result from installation errors or incorrect handling, etc. as outlined below.

Cause
- Moisture ingress

Effects
- Overheating of the bearing
- Corrosion
- Deterioration of rolling bearing grease performance due to moisture ingress

Remedy
- Ensure all adjacent parts are in good working condition
- Do not use high-pressure cleaners
- Adhere to manufacturer's installation guidelines
- Pay attention to cleanliness when lubricating bearings manually
- Use approved, non-contaminated lubricants only
- Ensure adjacent components are not contaminated during installation

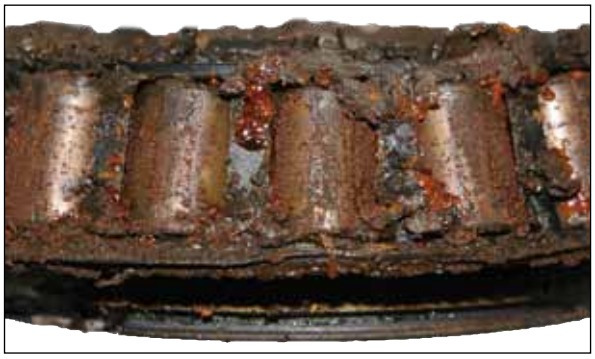

2.2 Adjacent Components

Although problems in the wheel bearing environment, for example defective axle support components, are a frequent cause of premature wheel bearing failure, this aspect is often ignored in the damage assessment process. Check all system components for their operational reliability prior to mounting the wheel bearing.

Cause
- Poor fit/oval deformation

Effects
- Inaccurate bearing fit
- Moisture ingress
- Noise

Remedy
- Ensure operational reliability of axle components
- Check wheel carrier for oval deformation

Cause
- ABS cable mechanically damaged

Effects
- Defective ABS system
- Non-functional ABS system due to mechanical damage

Remedy
- Ensure correct installation in compliance with manufacturer's specifications
- Lay cable correctly and avoid contact with moveable parts

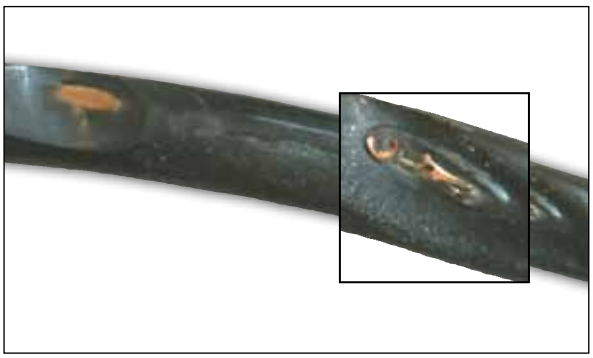

Cause
- Poor fit/oval deformation

Effects
- Moisture ingress
- Noise

Remedy
- Ensure operational reliability of axle components
- Check wheel carrier for oval deformation

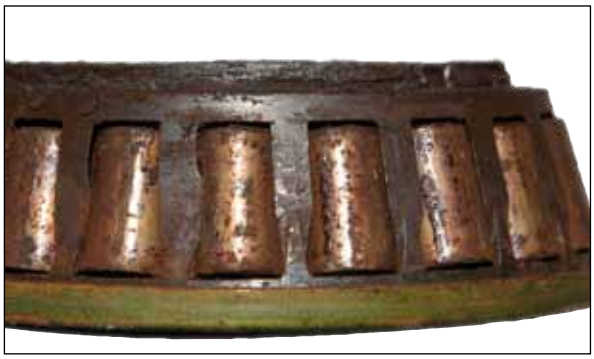

2.3 Mechanical Damage/Installation Faults

Improper installation and/or removal are also a frequent cause of wheel bearing damage. To avoid this it is essential to use special tools and follow the manufacturer's installation specifications at all times.

Cause
- Improper installation/removal
- Use of unsuitable press tools

Effects
- Foreign body impact
- Snug fit of bearing not guaranteed

Remedy
- Adhere to manufacturer's installation specifications
- Only use suitable tools

Cause
- Incorrect adjustment

Effects
- Bearing running hot

Remedy
- Ensure that installation complies with manufacturer's specifications
- Ensure correct adjustment

2.3 Mechanical Damage/Installation Faults

Cause
- Missing or damaged grease/dust seal allows moisture to ingress

Effects
- Corrosion
- Deterioration of rolling bearing grease performance due to moisture ingress

Remedy
- Replace missing or damaged grease/dust seal immediately

Cause
- Removal error
- Wheel bearing shows no signs of damage, its geometry and functional ability are free from defects

Effects
- Customer complaint could not be resolved
- No reimbursement of costs

Remedy
- Check the wheel bearing for any damage prior to removing it
- The vehicle suspension system is very complex and noise can be generated by a wide range of components other than the bearing, e.g. defective shock absorbers, strut mountings, tires and joints

2.4 Handling

Readings taken at wheel bearings have been used for the ABS system for quite a while. A defective ABS system can therefore result from a defective wheel bearing or its sensors. Incorrect handling can be detrimental to the system's functional ability.

Cause
- Mechanical damage impairs operational reliability
- Defective ABS encoding

Effects
- Non-functional ABS system due to mechanical damage
- Defective ABS system

Remedy
- Ensure correct installation orientation when replacing the wheel bearing
- Use the FAG detector card to identify the correct installation orientation of the integrated ABS transmitter encoder

Note:
Use extreme care when working on sensors in any part of the vehicle.

Cause
- Strong shocks from hitting the curb result in rolling body indentations

Effects
- Noise
- Moisture ingress

Remedy
- Avoid hard and frequent curb contact

2.4 Handling

Cause
- Damaged, torn ABS cable

Effects
- Non-functional ABS system due to mechanical damage

Remedy
- Do not carry the bearing by the ABS cable

Note:
Use extreme care when working on sensors in any part of the vehicle.

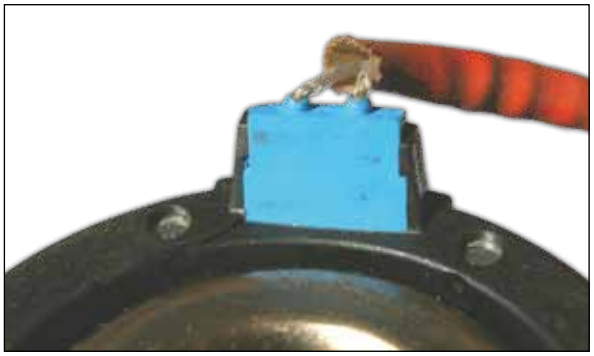

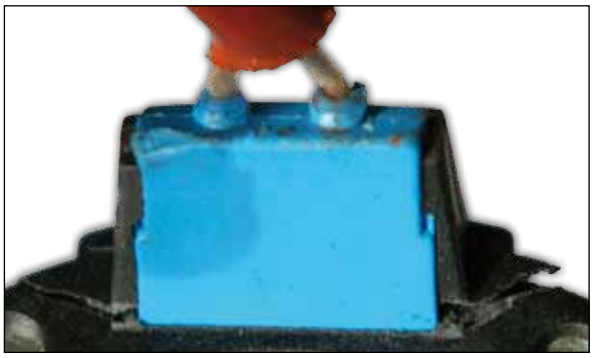

3 Fitting Instructions

3.1 Installing Wheel Bearing in Steering Knuckle

Adhere to the following procedure to mount the wheel bearing assembly correctly in the locating bore of the steering knuckle:

1. To install the wheel bearing in the locating bore of the steering knuckle, apply force to the bearing's outer ring. The pressure force is uniformly transferred to the outer ring by means of a shim with recess. The steering knuckle rests on the base plate of the press.

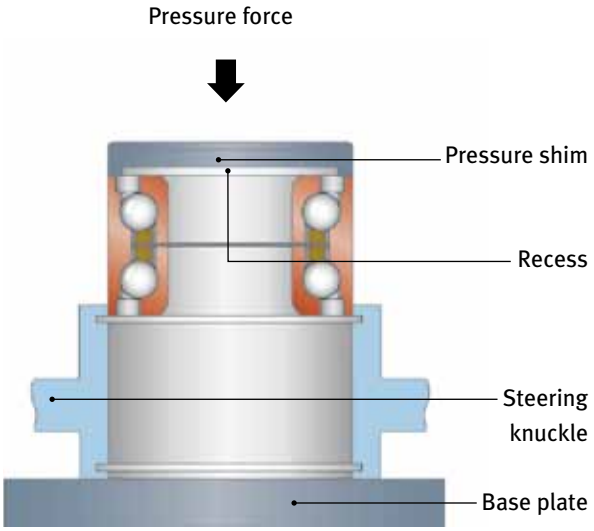

2. To install the wheel bearing in the locating bore of the steering knuckle, apply force to the bearing's outer ring. The steering knuckle flange side is positioned centrally on the support sleeve (arrow). The bearing is pressed into the knuckle and precisely aligned by means of a pressure shim with recess.

3. Use special pliers to mount the snap ring on the groove in the steering knuckle which locks the wheel bearing in axial direction.

4. When mounting the wheel bearing in the locating bore, observe the bevel on one side of the bearing. The bevel must be oriented in mounting direction to avoid tilting of the bearing when it is pressed in.

Caution:
Under no circumstances must the pressure force be transferred to the balls inside the bearing, as this would cause indentations in the raceways and damage the bearing!

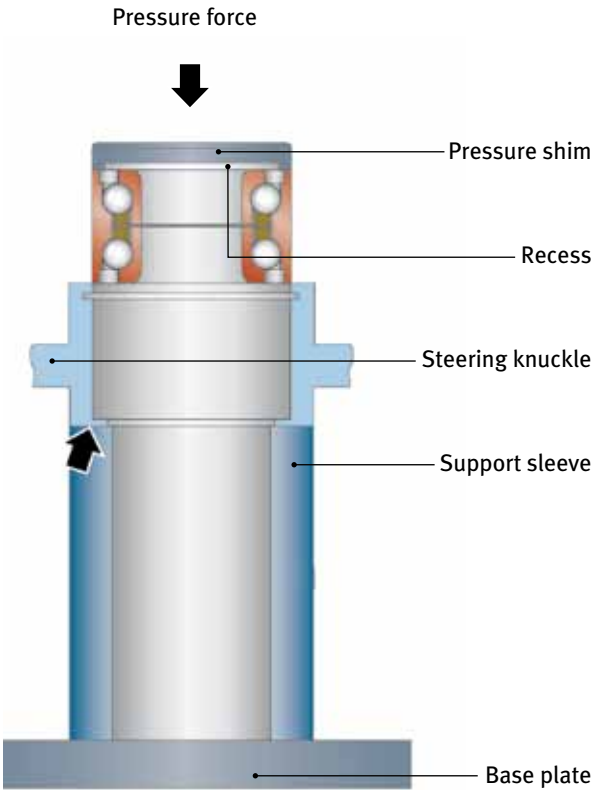

3.2 Mounting Wheel Hub

1. Place the wheel hub on the base plate of the press. The wheel bearing, which is pre-mounted in the steering knuckle, is pressed onto the hub by means of a mounting sleeve.

Caution:
The sleeve must be positioned only on the face side of the inner ring!

Note:
On some vehicles the parts to be installed are assembled in reverse order. The steering knuckle rests on the base plate while the wheel hub is pressed in from above.

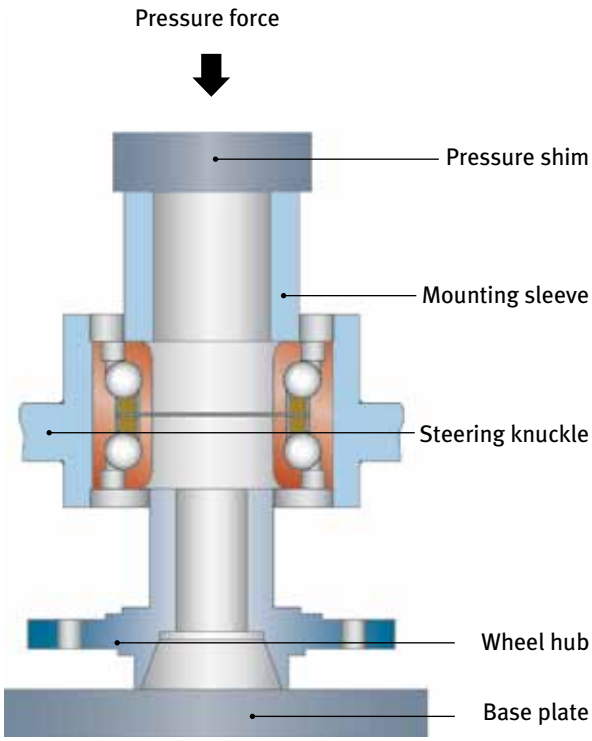

Caution:
Do not forget to mount the support sleeve! It supports the inner ring when pressed in thereby preventing scoring of the ball raceways of the bearing outer ring!

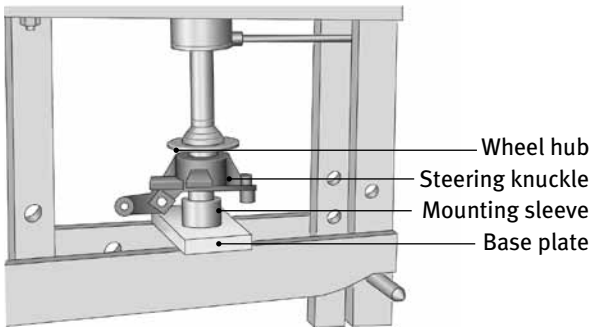

2. Tighten the fastening nut of the wheel bearing to the torque specified by the manufacturer. It is essential to apply the correct torque to ensure that the wheel is securely fastened and that the wheel bearing runs with optimal clearance. Using a torque wrench guarantees the application of correct tightening torque.

Note:
Take care not to tilt the wheel bearing during assembly, neither in the locating bore nor on the wheel hub, as this can cause severe damage. Wheel bearings with factory-fitted seals are already lubricated. They do not require additional lubrication and must not be cleaned using solvents as this can cause the bearing to fail prematurely.

3.3 Installing and Adjusting Tapered Roller Bearings in Motor Vehicle Wheel Hubs

Installation and removal procedures for tapered roller bearings vary depending on the vehicle make. Observe the manufacturer's instructions and specifications at all times!

1. Passenger car bearing with correctly adjusted tapered roller bearings (non-powered axle).

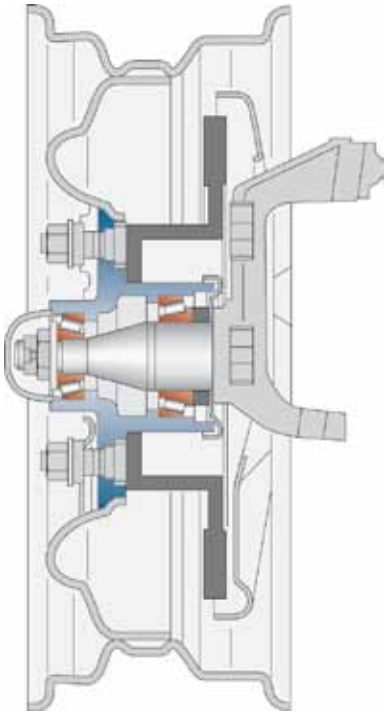

1. Clean the wheel hub body.

2. Apply small amounts of oil to the outer ring seating positions (arrows). Use a plunger to press in both outer rings.

Caution:
The plunger must be positioned on the outer ring face side only! Ensure the outer ring is mounted flush with the housing shoulders!

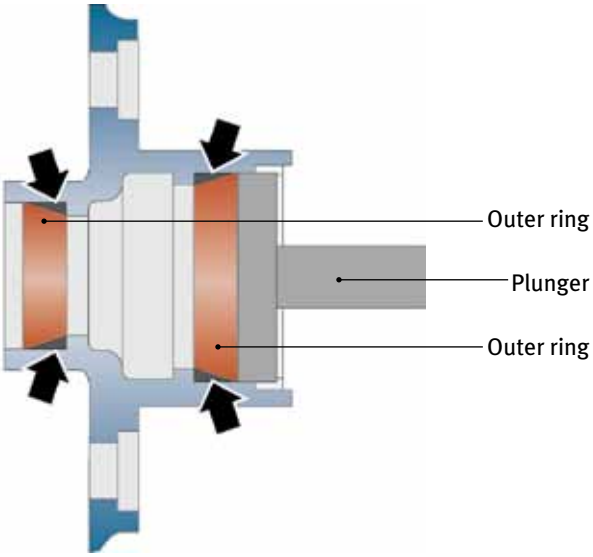

3.3 Installing and Adjusting Tapered Roller Bearings in Motor Vehicle Wheel Hubs

3. Lubricate the inner ring of the inner bearing generously.

Caution:
Squeeze lubricant also between cage, inner ring and rollers (arrows)!

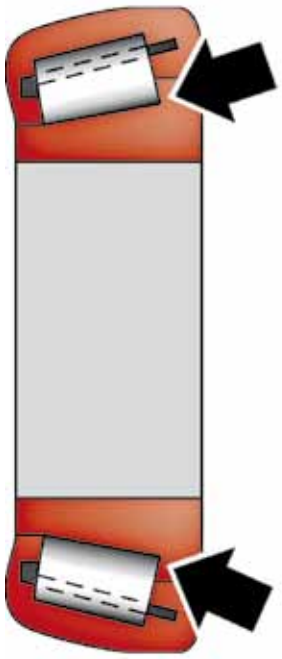

4. Mount the inner ring into the hub.
5. Mount the shaft seal ring into the hub.

Caution:
The sealing lip must face the bearing!

6. Position the protective cover and intermediate ring on the steering knuckle.

Caution:
The protective cover must fit tightly against the entire circumference of the steering knuckle socket (arrows)!

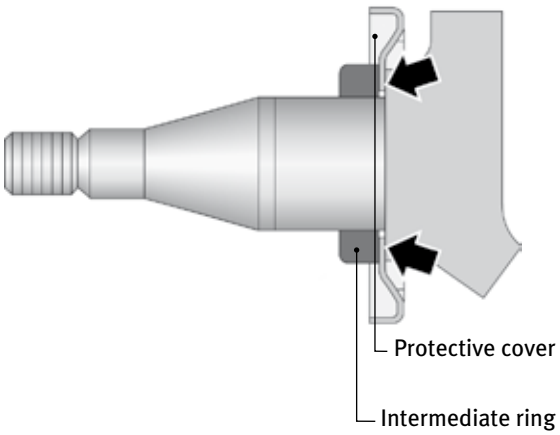

7. Position the wheel hub on the steering knuckle.

Caution:
Be careful not to damage the shaft seal ring!

8. Lubricate the inner ring of the outer bearing generously.

Caution:
Squeeze lubricant also between cage, inner ring and rollers (arrows)!

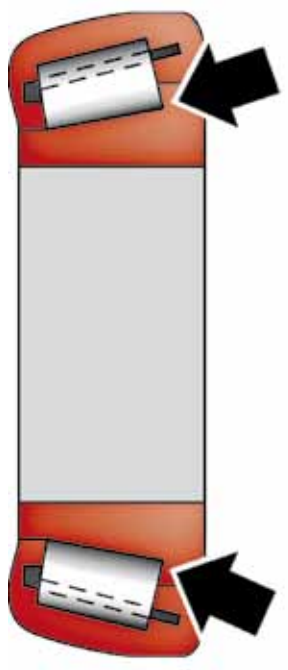

9. Position the inner ring of the outer bearing on the steering knuckle.
10. Position the shock washer.
11. Bolt on the slotted castellated nut.
12. Torque down the castellated nut while rotating the wheel hub until rotating resistance can be felt.

Caution:
Use a torque wrench and follow the manufacturer's repair instructions!

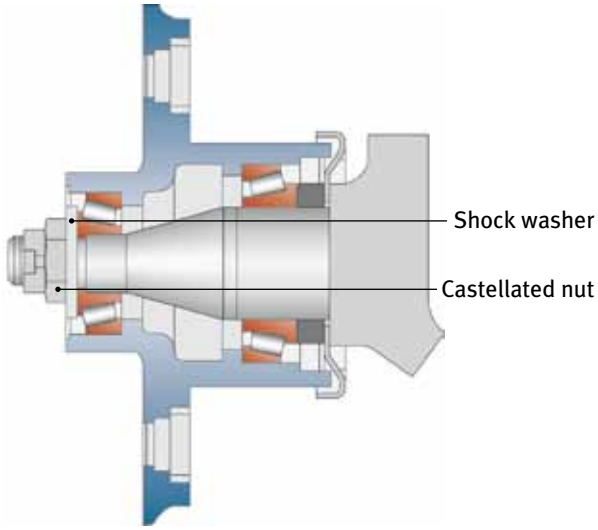

3.3 Installing and Adjusting Tapered Roller Bearings in Motor Vehicle Wheel Hubs

13. Loosen the castellated nut by 1/12 turn max. to bring it in line with the next split pin hole and secure it with a cotter pin.

14. Check for mounting and tilting clearance.

Note:
The wheel bearing must rotate smoothly without resistance. Ensure that there is no tilting clearance at the rim. If required, replace the shock washer or nut. If available, use a measuring device to check the axial play of the bearing.

15. Remount the cover.
16. Perform a test run, and then check whether the bearing play has changed. Re-adjust the bearing position if required.

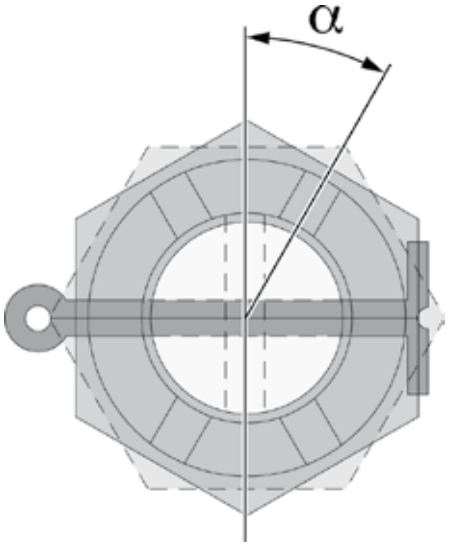

Some vehicle manufacturers stipulate a special installation/removal procedure.

Caution:
We recommend that technicians refer to the FAG service information which provides field-relevant information and continuously updated repair instructions. They are compiled by the Schaeffler Group's experts on a regular basis and published on our RepXpert Internet garage portal!

Before starting any repair work, ensure you have the required special tools at hand!

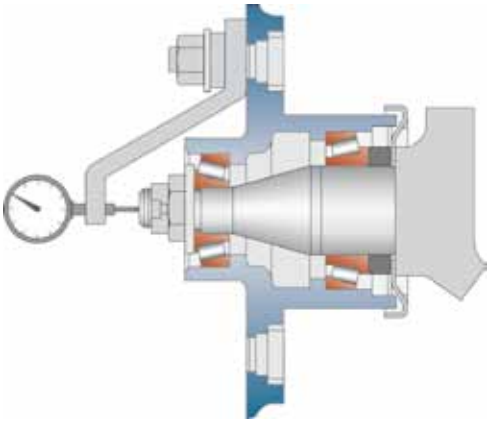

4 General Advice

1. Lubrication:
   Over 90% of rolling bearings are grease-lubricated. For wheel bearings requiring manual lubrication – this generally applies to open tapered roller bearings – only approved lubricants should be used (FAG Arcanol). Sealed FAG Wheel Bearing assemblies of the 1st to 3rd generations are lubricated for life and require no maintenance.

2. Replacement intervals:
   Manufacturers do not provide guidance on replacement intervals!

3. Check for oval deformation:
   a. Remove the wheel bearing from the locating bore.
   b. Check the surface of the wheel bearing outer ring for two dark spots located opposite each other. Check both areas located at 90° of the spots for damage. If there is no sign of damage, the locating bore is deformed and the steering knuckle must be replaced.
   c. Disassemble the wheel bearing to ensure the ball raceways of the outer ring are not polished. First, remove the seal (e.g. by means of special pliers), then the entire assembly consisting of outer and inner ring, cage and balls.
   d. Clean the raceways of the outer ring and check for craters corresponding to the dark spots on the outer ring's exterior. These craters indicate oval deformation of the steering knuckle.


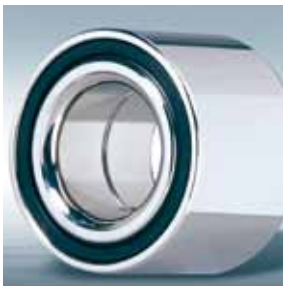

5 Service Information

Wheel bearings in a nutshell

Wheel bearings are safety-critical components. They contribute to driving comfort and operational reliability. Wheel bearings are subjected to a wide variety of stress factors, including high wheel speeds, hard shocks resulting from bumpy roads, stirred up dust particles and extreme temperatures. This may adversely affect the wheel bearing, or even cause the bearing to fail or seize under unfavorable conditions. A wheel bearing seizing during operation is a serious hazard and can cause severe accidents.

Caution:

- Do not compromise customer safety!
- Each wheel bearing has a unique design engineered to match a specific application!
- Think twice before opting for low-grade quality and bearing counterfeits!
- Always perform a routine check of all parts in the wheel bearing environment!
- Deformation of the locating bore can result in premature wheel bearing wear, noise and eventually part failure!

You can find up-to-date Service Infos on mounting and dismounting wheel bearings, as well as our online catalog at:

www.Schaeffler-Aftermarket.com or
www.REPXPERT.com

2x1 or 1x2 – Always on the safe side!
Our safety formula for changing wheel bearings

The advantages of changing both wheel bearings at once are obvious – greater passenger and driver safety and less wear on the vehicle.

FAG delivers tried-and-tested quality and expertise. The FAG WheelPro is a service innovation for the repair market and reinforces FAG's role as a pioneer among OE suppliers.

Choose between two safe options:

- 1x WheelPro twin pack
- 2x WheelSets – 2 individual replacement wheel bearing units

With its innovative concept for a per-axle wheel bearing replacement set, FAG – as one of the leading wheel bearing manufacturers – offers a new high-grade, made-to-measure solution for a large number of vehicle models:

- Money-saving twin pack
- FAG range (OE and aftermarket) covers a wide range of vehicles
- Time-saving per-axle wheel bearing change
- Enhanced customer satisfaction through innovative FAG WheelPro concept

With the twin-pack wheel bearing replacement set you will be on the road to success – in the salesroom, in the workshop and with customers.

2x FAG WheelSet = twice as safe!

Whatever you choose – twin pack or two single packs – with FAG wheel bearing sets and per-axle replacement you have the advantage of:

- More safety through simultaneous wheel bearing change on both sides of the axle
- More customer satisfaction with FAG's OEM quality
- More customer loyalty due to better customer satisfaction
- More return customers

Double the benefits!

LuK	●	●	●	●	●
LuK	●	●			
LuK	●	●	●	●	
INA	●	●	●	●	
INA	●	●	●	●	
INA	●	●			
FAG	●	●	●	●	

955 1000 430 2360/1.0/4.2012/OD-GB

Phone: +49 (0) 1801 753-333
Fax: +49 (0) 6103 753-297
automotive-aftermarket@schaeffler.com
www.schaeffler-aftermarket.com